Jadever

说明书材质要求：**105g 有光铜版纸**	说明书成品尺寸：**105x143mm**
第一：专色+CMYK油墨要求： 1.TOTAL专色油墨，见实物色样调整 2.C色油墨：泗联天蓝墨 3.M色油墨：泗联洋红墨 4.Y色油墨：泗联中黄墨 5.K色油墨：泗联黑墨	第二：特别注意： 1.印刷时看样颜色请参考我司提供的实物样品颜色，不得偏色。 2.322C的专色不得参考C=100，M=28.42，Y=48.29，K=21.6 对应的四色色谱颜色来看样印刷 ■ Black（单色印刷）
折叠方式：**风琴折** 特殊情况：16P/20P：风琴折 + 对折	备注：

售后二维码粘贴注意事项：
按照标注的标贴尺寸制作二维码,不允许盖住边框，标贴位置必须在正中间。

特别注意：此页内容不印刷

风琴折 + 对折 页面顺序

16P 页面顺序

9	10	11	封面
12	13	14	封底

1	2	3	4
5	6	7	8

20P 页面顺序

11	12	13	14	封面
15	16	17	18	封底

1	2	3	4	5
6	7	8	9	10

更改记录			
	1.参考WBN1550		
	0623.J01	2023.6.30	ZRR
	版本号	日期	设计师

Jadever

Ga18 AIR BRAD NAILER

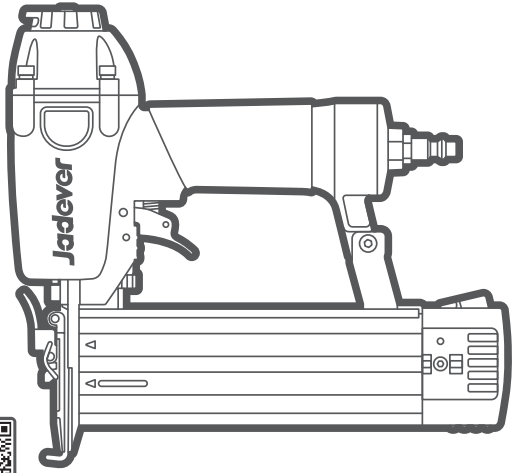

SCAN FOR VIDEO

JDBN1550

PRODUCT MANUAL

Original Instructions

GENERAL SAFETY WARNINGS

Important safety rules

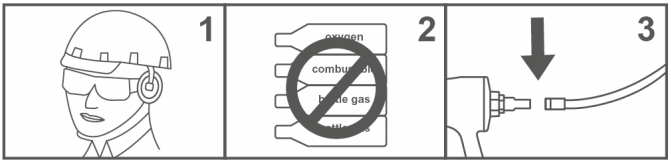

1. Keep children away. All children should be kept away from the work area. Don't let them handle the tool.
2. Use safety glass and ear protection: air tool operators and others in work area should always wear safety glass to prevent the injury from fasteners
   And flying debris when loading and unloading this tool. Maybe the noise would harm your hearing, wear the ear protection to safeguard. (see Figure 1.)
3. Never use oxygen, combustible or any other bottle gas as a power source or would cause explosion and serious personal injury. (see Figure 2.)
4. Do not connect tool to compressed air which pressure exceeds 120psi.
5. Do not place over-long air hose in working area in case of the operator's unexpected tripping. Make sure all connections are tight.
6. Carrying tool only by the handle do not keep the trigger pull on safety yoke mechanism to avoid unintentional firing of fastener.
7. Keep the tool pointed away from yourself and others at all time and keep hands, any body parts away rear area to safety guard against possible injury.
8. Disconnect tool from air supply before loading fasteners to prevent a fastener from being fired during connection. (see Figure 3.)
9. Do not keep the trigger or safety depressed during loading fasteners or the unintentional firing of a fastener would cause personal injury.
10. Do not keep the trigger or safety depressed during loading fasteners or the unintentional firing of a fastener would cause personal injury.
11. Disconnect tool from air supply hose and close the compressor before performing maintenance, alter the accessories or during non-operation.
12. Do not drive fastener on scaffoldings, ladders and on such similarly construction, not working on airtight case, and vehicles.

13. Do not drive fastener on top of nailed fastener, or the fastener can ricochet causing personal injury.
14. Never use a tool that is leaking air, had missing or damaged parts or requires repair and make sure all the screws and securely tightened.
15. Only use parts and accessories recommend by manufacturer.

THE SYMBOLS IN INSTRUCTION MANUAL

	Read the instruction manual before using.
	CE conformity.
	Wear safety glasses, hearing protection and dust mask.
	Waste electrical products should not be disposed of with household waste. Please recycle where facilities exist. Check with your Local Authority or retailer for recycling advice.
	Safety alert. Please only use the accessories supported by the manufacturer.

SPECIFICATIONS

Technical specifications

Model No.	JDBN1550
Capacity	100Pcs
Nail length	15-50mm (5/8″ - 2″)
Fastener size	Ga18 (1.25×1.0mm) nails
Operation pressure	60-100Psi
Air Inlet	G1/4″

OPERATION PICTURE

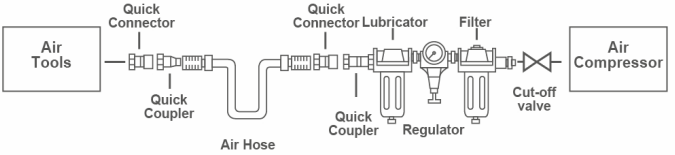

Operating instruction

This tool drives Ga.18 finish nails from 15mm to 50mm length and Ga.18 staples from 16mm to 40mm length. 2 in 1 magazine, shoot staples and finish nails without adjustment. Large cast aluminum body provides more power to easily drive nails in to hard wood. Comfort grip rubber handle for improved control and comfort even during extended use. Features 360-degree exhaust port can be adjusted to any direction. Continue firing for highly efficient working. Narrow nose is idea for door and window trims, exterior trims, and cabinet work, finish paneling, decorative trims, furniture making and etc.

Air supply

1. Use clean, Dry and Regulated compressed air at 4-7 bar (60-100psi).

2. Never exceed maximum and minimum pressure. Too low or too high pressure would cause noise, fast-worn or misfiring.
3. When connecting air supply always keep hands and body from discharge area of tool.
4. A filter-regulator-lubrication is required and should be located as close to tool as possible.
5. Keep air filter clean. A dirty filter will reduce the air pressure to the tool causing a reduction in power and efficiency.
6. For better performance, install a quick connector in your tool and quick coupler on the hose if possible.
7. Be sure all connections in air supply system are sealed to prevent air loss.

⚠ Warning:

Disconnect the tool from the air compressor before adjusting, clearing jams, servicing, relocating and during non-operation.

Regular lubrication, if your tool without using the in-liner automatic oilier, place 2 or 6 drops of pneumatic tool oil into the air inlet before each work day or after 2 hours of continuous use depending on the characteristic of work piece or type of fasteners.

Check and change all worn or damaged O-rings, seals, etc. Tight all the screws and caps in case personal injury.

Inspect trigger and safety mechanism to assure safe system is complete and functional: no loose and missing parts, no building or sticking parts

Keep magazine and nose of tool clean and free of any dirt lint or abrasive particles

Troubleshooting

The following form lists the common operating system with problem and solutions. Please read the form carefully and follow it.

⚠ Warning:

If any of the following symptoms appears during your operating, stop using the tool immediately, or serious personal injury could result. Only a qualified persons or an authorized service center can perform repairs or replacement of tool.

Disconnect tool from air supply before attempting repair or adjustment. When replacing O-rings or Cylinder, lubricate with air tool oil before assembly.

MAINTENANCE&MALFUNCTIONS

Possible causes of failure

Symptom	Problem	Solutions
Air leak near top of tool or in trigger area	1. O-ring in trigger valve are damage.	1. Check and replace O-ring.
	2. Trigger valve head are damage.	2. Check and replace.
	3. Trigger valve stem, seal or O-ring are damaged.	3. Check and replace trigger valve stem, seal or O-ring
Air leak near bottom of tool.	1. Loose screws.	1. Tighten screws.
	2. Worn or damaged O-rings or bumper.	2. Check and replace O-rings or bumper.
Air leak between body and cylinder cap.	1. Loose screws.	1. Tighten screw.
	2. Worn or damaged O-rings or seals.	2. Check and replace O-rings or bumper.
Blade driving fastener to deep.	1. Worn bumper.	1. Replace bumper.
	2. Air pressure is too high.	2. Adjust the air pressure.
Tool does not operate well: cannot drive fastener or operate sluggishly.	1. Inadequate air supply.	1. Verify adequate air supply.
	2. Inadequate lubrication.	2. Place 2 or 6 drops of oil into air inlet.
	3. Worn or damaged O-rings or seals	3. Check and replace O-rings or seal.
	4. Exhaust port in cylinder head is blocked.	4. Replace damaged internal parts.

Tool skips fasteners.	1. Worn bumper or damaged spring.	1. Replace bumper or pusher spring.
	2. Dirt in front plate.	2. Clean drive channel on front plate
	3. Dirt or damage prevents fasteners from moving freely in magazine.	3. Magazine needs to be cleaned.
	4. Worn or dry O-ring on piston or lack of lubrication.	4. O-ring need to be replaced. And lubricate.
	5. Cylinder cover seal leaking.	5. Replace Sealing washer.
Tool jams.	1. Incorrect or damaged fasteners.	1. Change and use correct fastener.
	2. Damaged or worn driver guide.	2. Check and replace the driver.
	3. Magazine or nose screw loose.	3. Tighten the magazine.
	4. Magazine is dirty.	4. Clean the magazine.

Jadever

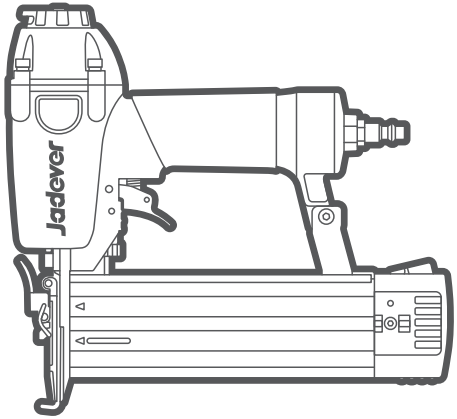

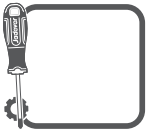

Jadevermall
www.jadevermall.com
KEYWAY TECHNOLOGY (NANTONG) CO.,LTD
MADE IN CHINA 0723.J01
No. 99, Gugang Road, Chongchuan District,
Nantong City, China