Jadever

说明书材质要求：105g 有光铜版纸	说明书成品尺寸：105x143mm
第一：专色+CMYK油墨要求： 1.K色油墨：泗联黑墨	第二：特别注意： 暂无 Black（单色印刷）
折叠方式：风琴折（20P 以下用风琴折	备注：

售后二维码粘贴注意事项：

按照标注的标贴尺寸制作二维码,不允许盖住边框，标贴位置必须在正中间。

特别注意：此页内容不印刷

风琴折 + 对折 页面顺序

16P 页面顺序

9	10	11	封面
12	13	14	封底

1	2	3	4
5	6	7	8

20P 页面顺序

11	12	13	14	封面
15	16	17	18	封底

1	2	3	4	5
6	7	8	9	10

更改记录			
	1.品牌互转WGA1506		
	0723.J01	2023.7.17	ZLJ
	版本号	日期	设计师

Jadever

AIR SPRAY GUN

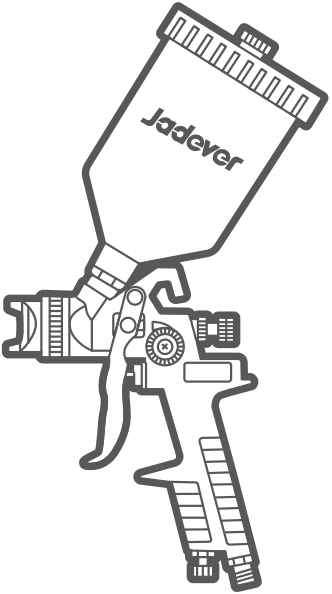

SCAN FOR VIDEO

JDGA1506

PRODUCT MANUAL

Original Instructions

GENERAL SAFETY WARNINGS

Important safety instructions

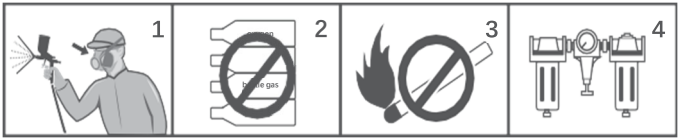

1. For toxic vapors produced by spraying certain materials can create intoxication and serious damage to health. Always wear safety glasses, gloves and respirator to prevent the toxic vapor hazard, solvent and pointing paint coming into contact your eyes or skin. (see Dia 1).
2. Never use oxygen, combustible or any other bottle gas as a power source or would cause explosion and serious personal injury. (see Dia 2).
3. Fluid and solvent can be highly flammable or combustible. Please use the tool only in well-ventilated area, and avoid any ignition sources, such as smoking, open flames and decrial hazard. (see Dia 3).
4. Disconnect tool from air supply hose before doing tool maintenance and during non-operation, for emerge stop and prevention of unintended operation, a ball valve near the gun to air supply is recommend.
5. Use clean, dry and regulate compressed air rated at 3.0-4.0bar, never exceed maximum permissive operating pressure 8.3bar (120psi) (see Dia 4).
6. Never use homogenate hydrocarbon solvent, which can chemically react with aluminum and zinc parts and chemically compatible with Alum. and zinc pats.
7. Never point gun at you and others at any time.
8. Before operating the tool, make sure all the screws & caps are securely tightened in case of leaking;
9. Before painting, make inspection for free movement of trigger and nozzle to insure tool can operate well.
10. Never modify this tool for any other applications. Only use parts, nozzles and accessories recommended by manufactures.

SPECIFICATIONS

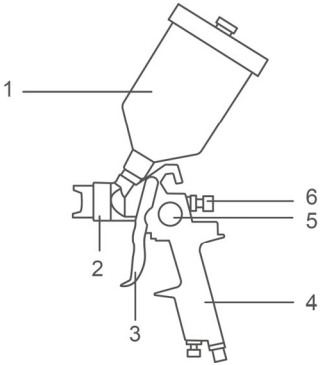

1. 600cc Plastic cup
2. Nozzle needle & Air cap
3. Trigger
4. Gun body
5. Pattern adjustable knob
6. Fluid adjustable knob

Technical specifications

Model No.	JDGA1506
Air Inlet	1/4˝
Type of Feed	Gravity
Standard Dia of Nozzle	1.4mm
Max. pressure of air	2.0-3.5Bar (29-50.8psi)
Paint Capacity	600cc
Avg. Air Consumption	85-127 L/min (3-4.5cfm)
Pattern Width	180-230mm

OPERATION PICTURE

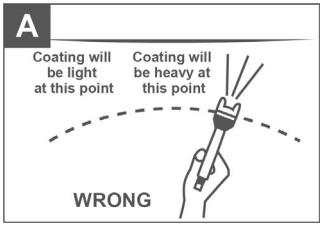

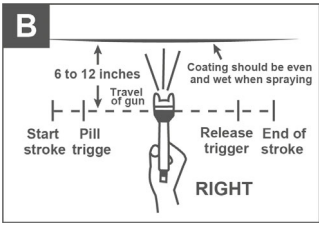

OPERATION

Instructions for operation

Preparation

1. After unpacking the product, inspect carefully for any damage that may have occurred during transit. Make sure to tighten fittings, bolts, etc., before putting unit into service.
2. Thoroughly mix and thin paint in accordance with the paint manufacturer's instructions. Most materials will spray readily if thinned properly.
3. Strain material through filter, cheese cloth or a paint strainer.
4. Fill the canister about % full and start the air compressor.

⚠WARNING

Do not exceed maximum pressure of spray gun or any other parts in the compressor system.

5. After Connect the gun to air supply, please make sure that the fluid cap, container and air hose have been connected tightly with spray gun.
6. Set up a piece of cardboard or other scrap material to use as a target and adjust for best spray pattern.

⚠WARNING

Never aim or spray at yourself or anybody else which would cause serious injury.

7. Test the consistency of the material by making a few strokes on a cardboard target. If material still appears too thick, add a small amount of thinner.

Thing with care!

Do not exceed paint manufacturer's thinning recommendations.

Operation

1. Begin spraying. Always keep the gun at right angles to the work.
2. Keep the nozzle about 6 to 12 inches from the work surface. Grip the gun keeping perpendicular with spraying area then move it parallel for several times, stopping gun movement in mid-stroke will cause a buildup of paint and result in runs. Do not fan the gun from side to side while painting. This will cause a build-up of paint in the center of the stroke and an insufficient coating at each end.
3. Trigger the gun properly. Start the gun moving at the beginning of the stroke before squeezing the trigger and release the trigger before stopping gun movement at the end of the stroke. This procedure will blend each stroke with the next without showing overlap or unevenness.
4. The amount of paint being applied can be varied by the speed of the stroke, distance from the surface and adjustment of the fluid control knob.
5. Overlap strokes just enough to obtain an even coat. NOTE: Two thin coats of paint will yield better results and have less chance of runs than one heavy layer.
6. Use a piece of cardboard as a shield to catch overspray at the edges of the work to protect other surfaces.

MAINTENANCE

Incomplete cleaning could cause function failures and a degradation of the fan form.

1. Remove any remaining paint by pouring it into another container.
2. Disassemble the spray gun making sure to remove the needle before disassembling the nozzle to avoid damage to the housing of the nozzle closure.
3. Clean all the paint passages and the nozzle. Clean the other components using a brush soaked in solvent.
4. Reassemble the spray gun and spray a small quantity of solvent to eliminate all the residues in the paint passages.
5. After the product is broken, it should be sent to a special recycling agency, not discarded at will.

⚠ WARNING

Never use metal or other objects that could damage the holes in the nozzle and cap. never immerse the spray gun completely in solvent. never use components or parts that are not manufacturer originals.

Storing

1. When not using spray gun, turn the fluid adjustment knob counter-clockwise to open which will reduce spring tension on needle fluid tip.
2. Spray gun MUST BE well cleaned and lightly lubricated.

Jadever

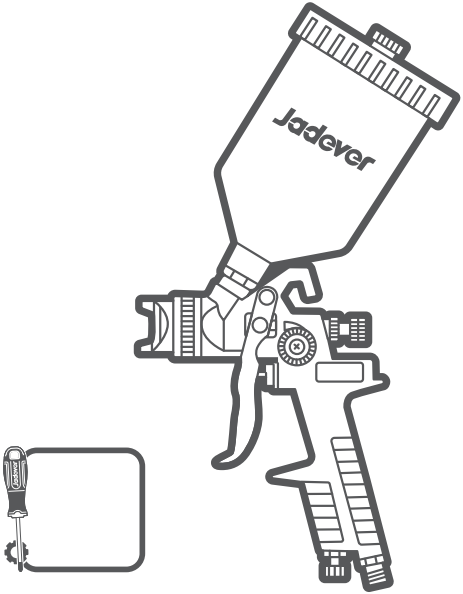

22
PAP

Jadevermall
www.jadevermall.com

KEYWAY TECHNOLOGY (NANTONG) CO., LTD
MADE IN CHINA 0723.J01
No. 99, Gugang Road, Chongchuan District,
Nantong City, China